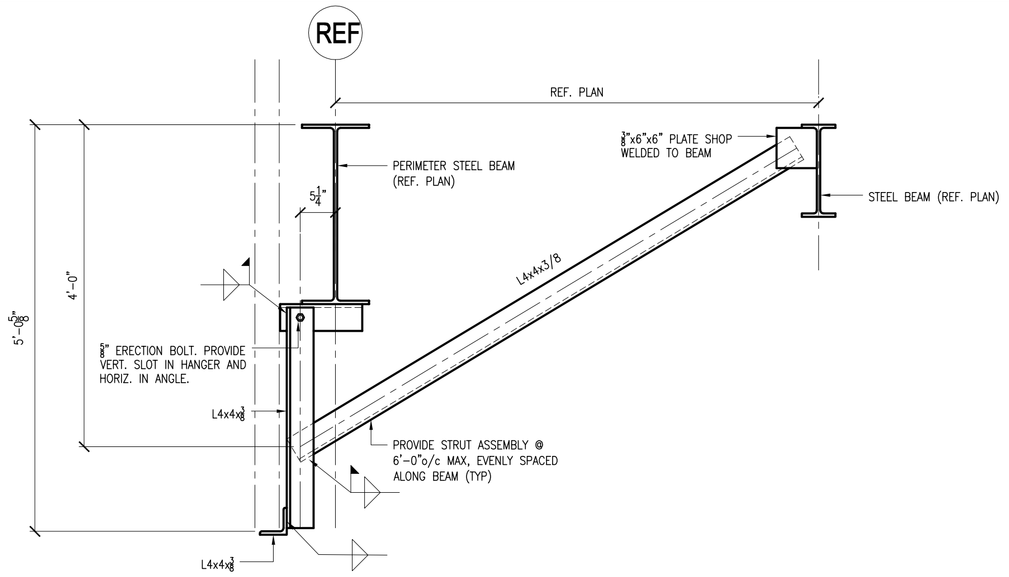

BRICK SUPPORT HANGER DETAIL @ STRIP WINDOWS

SCALE: ¾"=1'-0"

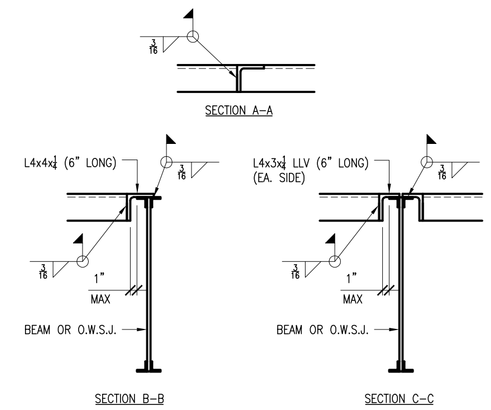

TYPICAL ROOF OPENING FRAME CONNECTION DETAILS

SCALE: NTS

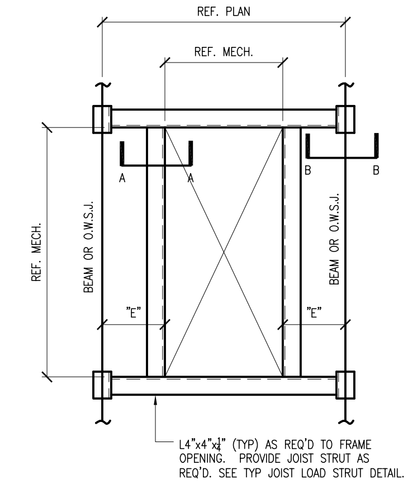

TYPICAL ROOF OPENING DETAIL

SCALE: NTS

NOTES:
1. TYPICAL ROOF OPENING DETAIL SHOWN APPLIES TO ALL ROOF OPENINGS WHERE LEAST DIMENSION IS 14" OR LARGER. REINFORCE ROOF OPENINGS LESS THAN 14" BY WELDING 16 GAGE SHEET METAL 1'-0" WIDER THAN OPENING TO METAL ROOF DECK. WHERE DIMENSION "E" IS LESS THAN 6", ANGLE MAY BE OMITTED.

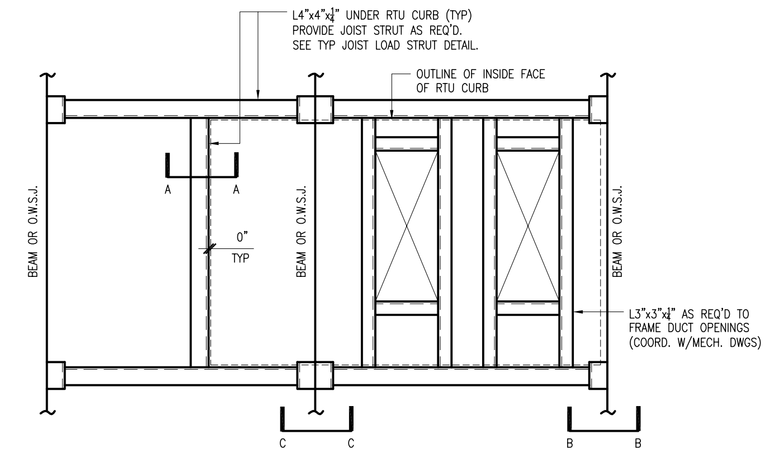

TYPICAL RTU SUPPORT FRAME

SCALE: NTS

NOTES:
1. COORDINATE ROOF CURB DIMENSIONS AND DUCT PENETRATION DIMENSIONS WITH FINAL APPROVED SHOP DRAWINGS FOR MECHANICAL EQUIPMENT.

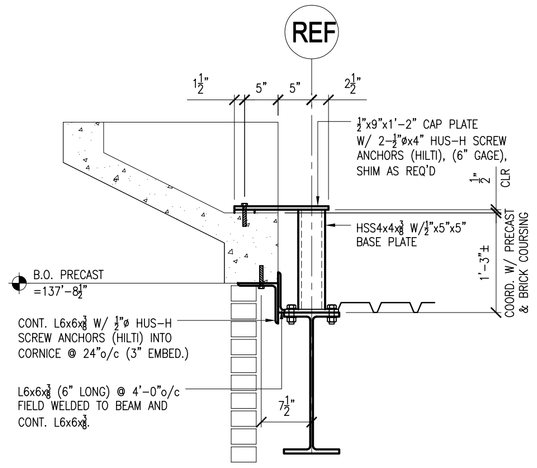

SUPPORT DETAIL @ PRE-CAST CORNICE

SCALE: ¾"=1'-0"

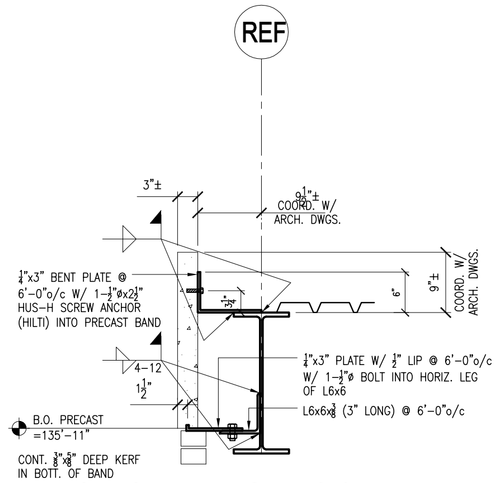

SUPPORT DETAIL @ PRE-CAST BAND

SCALE: ¾"=1'-0"

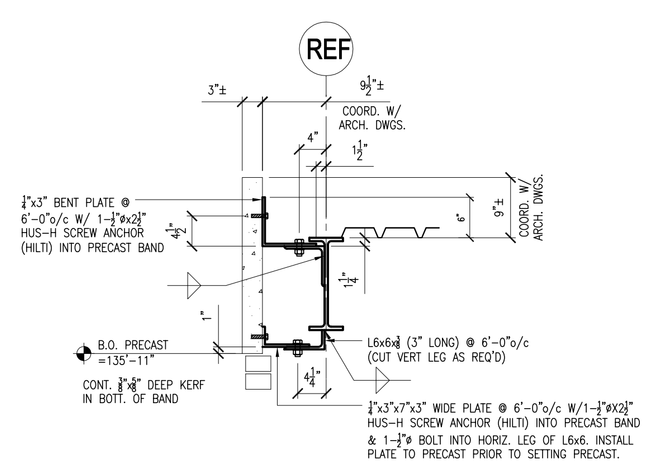

SUPPORT DETAIL @ PRE-CAST BAND @ W14 & W12

SCALE: ¾"=1'-0"

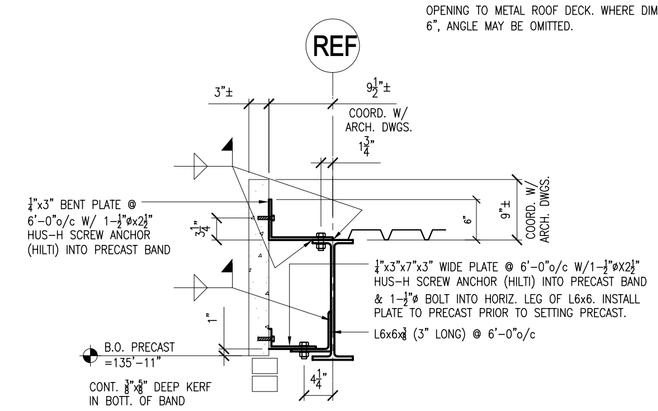

SUPPORT DETAIL @ PRE-CAST BAND @ W18 & W21

SCALE: ¾"=1'-0"

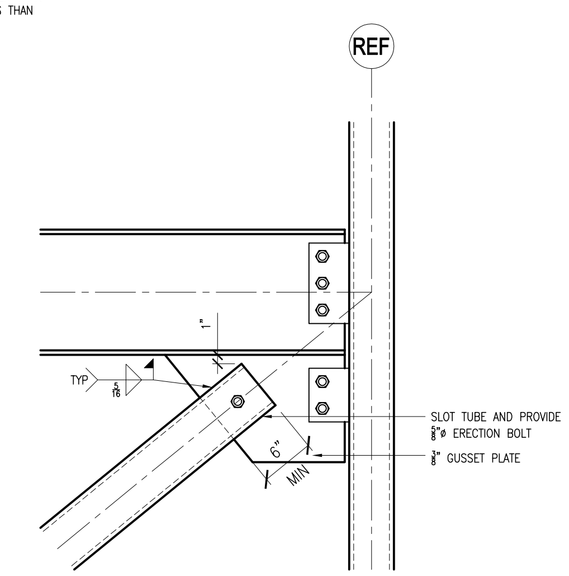

A TYPICAL BRACE CONNECTION DETAIL @ BEAM

S3.2|S3.2 SCALE: 1"=1'-0"

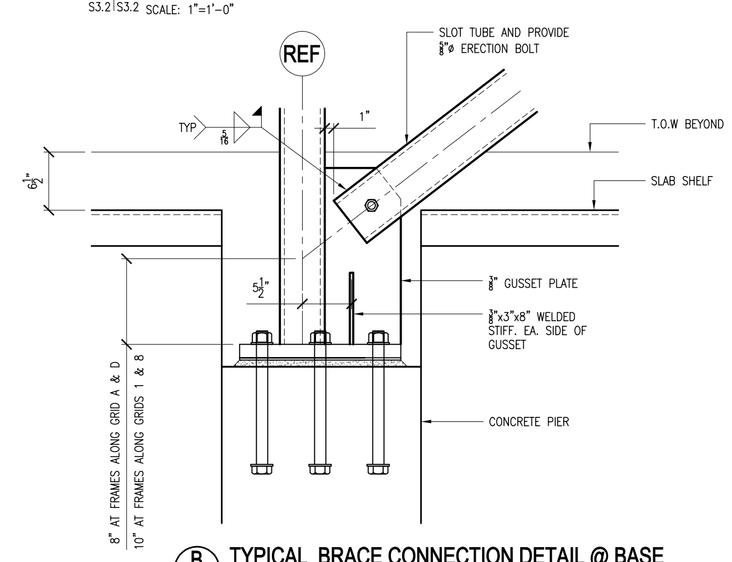

B TYPICAL BRACE CONNECTION DETAIL @ BASE

S3.2|S3.2 SCALE: 1"=1'-0"

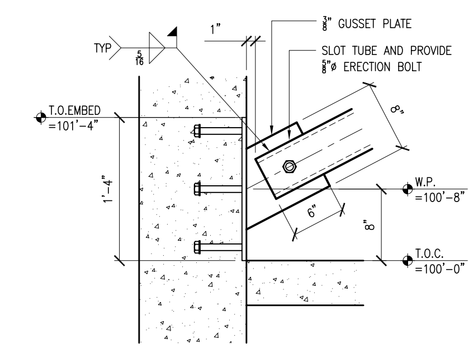

C TYPICAL BRACE CONNECTION DETAIL @ WALL EMBED

S3.2|S3.2 SCALE: 1"=1'-0"

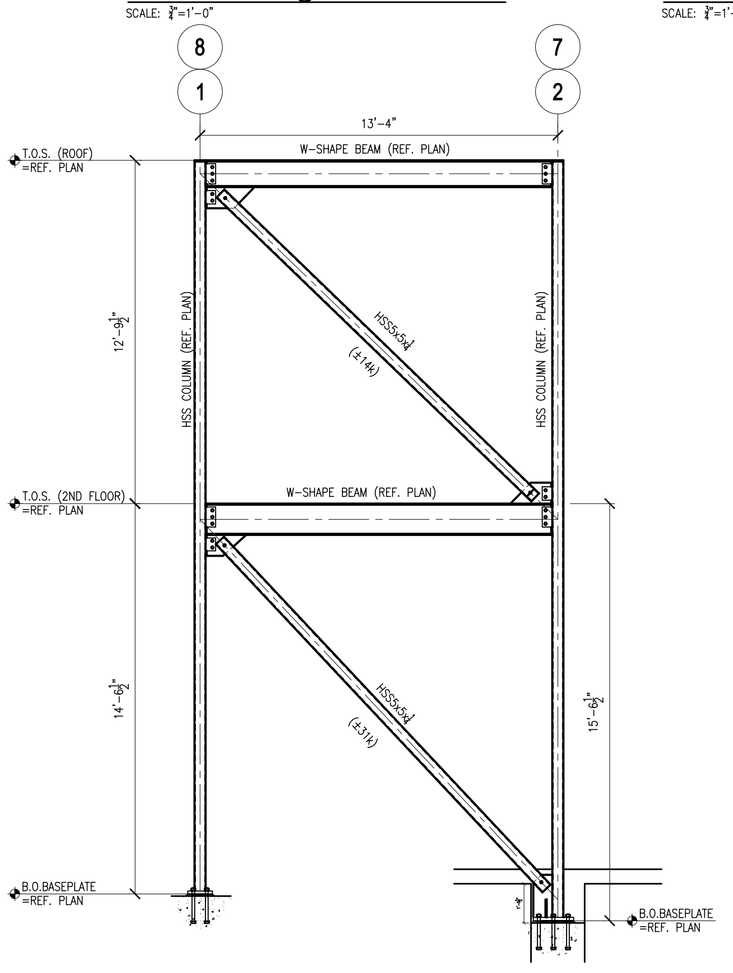

BRACED FRAME ELEVATION ALONG GRIDS "A" AND "D"

SCALE: ¼"=1'-0" (TYP OF 4)

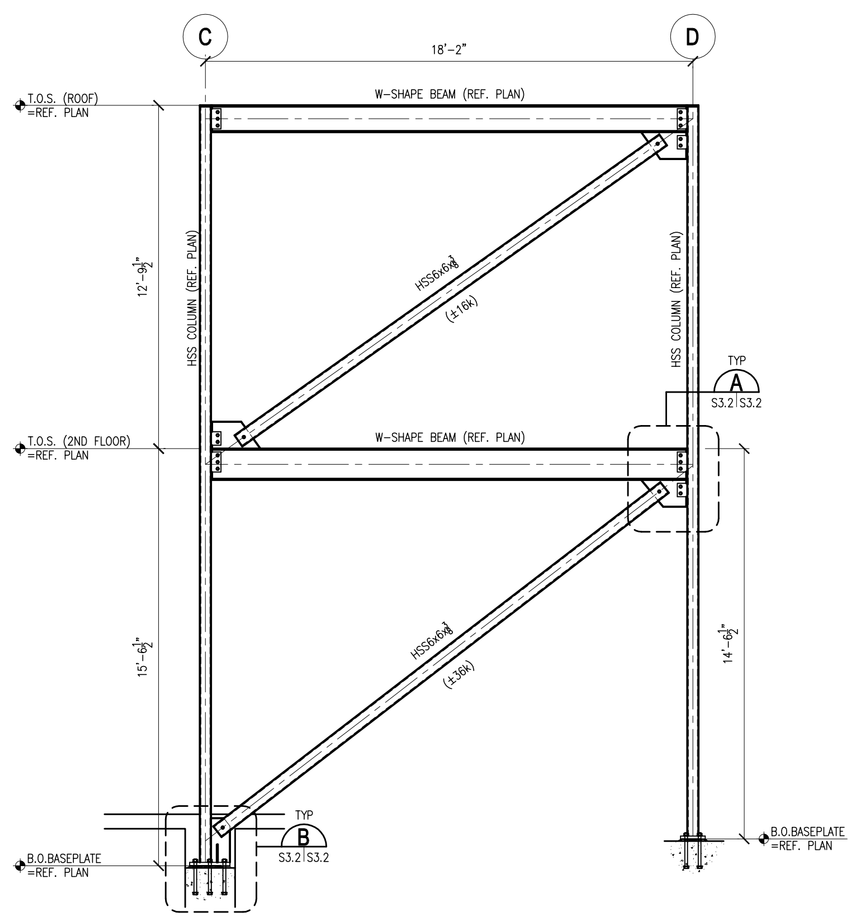

BRACED FRAME ELEVATION ALONG GRIDS "1" AND "8"

SCALE: ¼"=1'-0" (TYP OF 2)

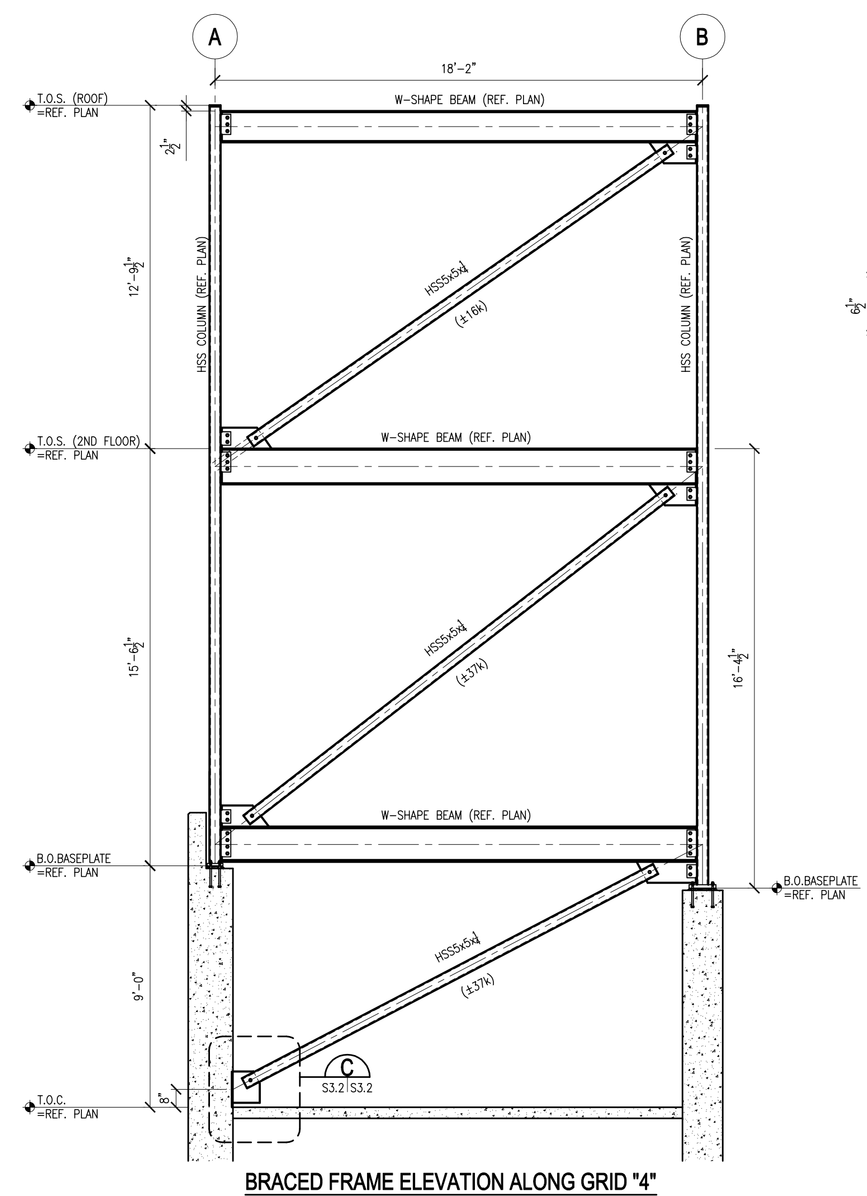

BRACED FRAME ELEVATION ALONG GRID "4"

SCALE: ¼"=1'-0" (TYP OF 1)

CURRENT DWGS AS OF 8/23/07

REVISION LOG

DATE	DESCRIPTION	REV.
6/08/07	ISSUED FOR CONSTRUCTION	2
5/9/07	ADDENDUM #1	1
4/12/07	PERMIT SET	--

ENGINEER STAMP

ENGINEER OF RECORD
TIM HARDY, PE

HARDY STRUCTURAL ENGINEERING
875 roosevelt hwy, suite 130, colchester, vt 05446
phone: (802) 655.0755 fax: (802) 655.2696
www.hardyse.com

PROJECT
EAST MOUTAIN VIEW DRIVE
SOUTH BURLINGTON, VERMONT

DRAWING TITLE
STRUCTURAL STANDARD DETAILS

PROJECT ENGINEER	ENGINEER OF RECORD
TIM HARDY	TIM HARDY
PROJECT CAD	PROJECT NUMBER
STACIE DOUGHERTY	06064.00
SCALE	DATE
AS NOTED	JUNE 8, 2007
DRAWING NUMBER	REVISION
S3.2	2